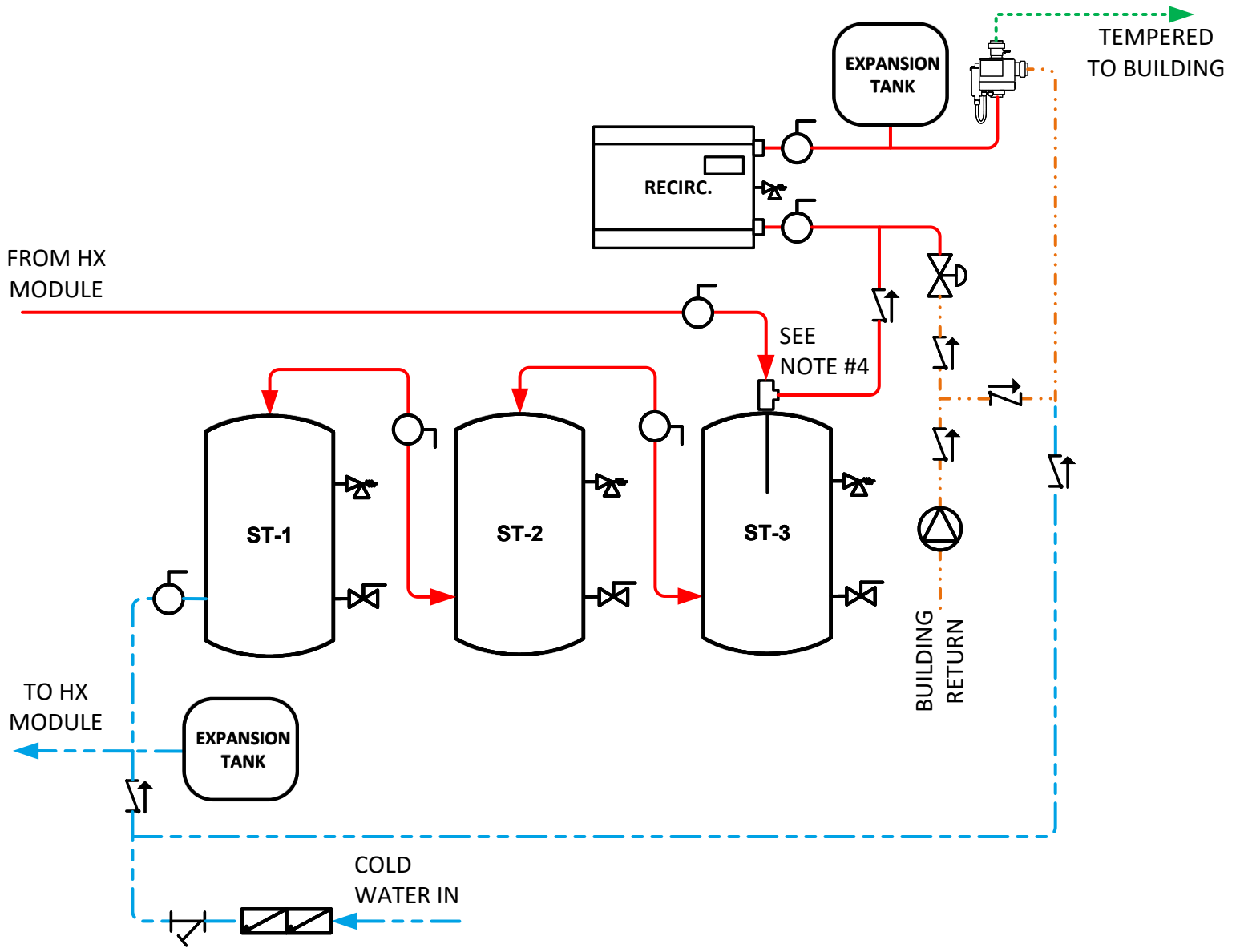

Pipe Temp.	Line Type
CW	
HW	
Recirc	
Tempered	

- T&P RELIEF VALVE
- PUMP
- MIXING VALVE
- BALL VALVE
- CHECK VALVE
- BALANCE VALVE
- DRAIN
- STRAINER
- BACKFLOW PREVENTER
- DIFFUSER TEE

NOTES:
1) NOT FOR CONSTRUCTION
2) RECIRCULATION LOOP BY OTHERS
3) COLD WATER EXPANSION TANK MUST BE LOCATED AFTER CHECK VALVE
4) LOCATE DIFFUSER TEE IN LAST STORAGE TANK

Lync by WATTS
Fort Worth, TX 76134
Blauvelt, NY 10913

BOLT MINI – RECIRC. + 3 TANKS INSTALLATION

DRWN. BY	DATE	DWG. NO:	REV.
BJJ	04/30/26	SD-L-1378	A